Via Casaglia,101
25039 TRAVAGLIATO (BS)
Telefono (0039) 030 660883
temaitalia@temaitalia.com

"DBETE 01" MACHINE

AUTOMATIC LABEL APPLICATION MACHINE, FOR LABELLING THE SPOOL FLANGES OF THE SPOOLS DISCHARGED BY THE "UNIVERSAL" MACHINE

- After receiving the spool pack discharged by the "UNIVERSAL" machine, this label application machine retrieves a label from the printer and applies it onto the spool flange.
- The printer unit can be supplied by the customer *(The quality of label adhesion depends on the labels themselves).*

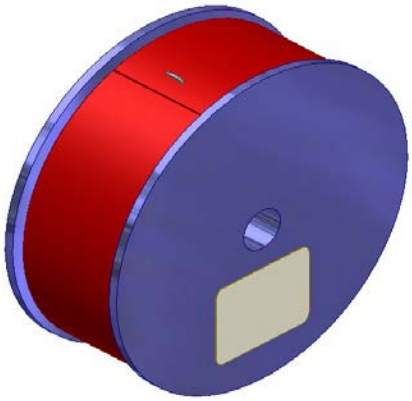

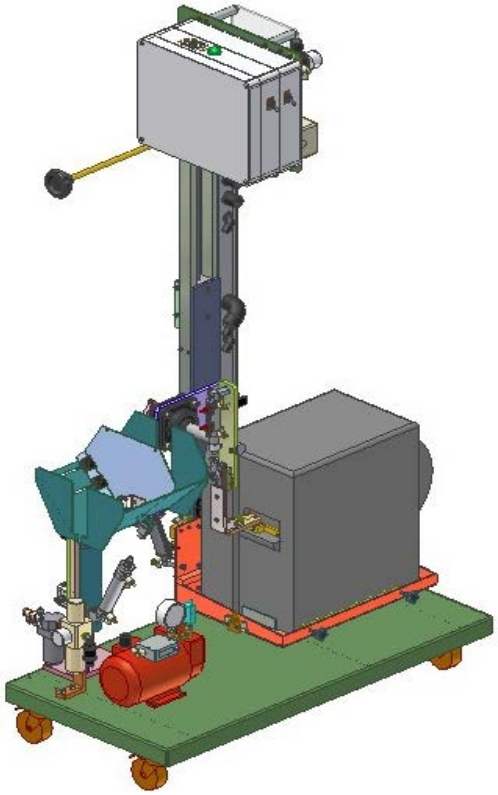

TECHNICAL FEATURES

STANDARD LABEL SIZE	28 x 40mm
SPOOL DIMENSIONS	Ø80÷220mm Length 12÷210mm
POWER SUPPLY VOLTAGE	2x230V+T 50÷60Hz 0,5kW
COMPRESSED AIR REQUIREMENTS	6÷10bar 50 Nℓ per minute
OVERALL MACHINE DIMENSIONS	1000 x 850 x h 1700mm
NET WEIGHT	180 kg
HOURLY OUTPUT	*Based on winding machine speed.*

The features described above may vary and must be confirmed based on your products.

Via Casaglia,101
25039 TRAVAGLIATO (BS)
Telefono (0039) 030 660883
temaitalia@temaitalia.com

"DBETE 02" MACHINE

AUTOMATIC LABEL APPLICATION MACHINE, FOR LABELLING THE FLANGES OF PACKAGES RETREIVED FROM THE LOADER UNIT

- This machine enables labelling of packages stored in stocking facilities.
- The operator must fill the loader unit with the packages to be labelled and must then start the labelling cycle.
- Both light flashing and sound warning signals will go off when the loader is empty.
- The printer unit can be supplied by the customer.

  (The quality of label adhesion depends on the labels themselves).

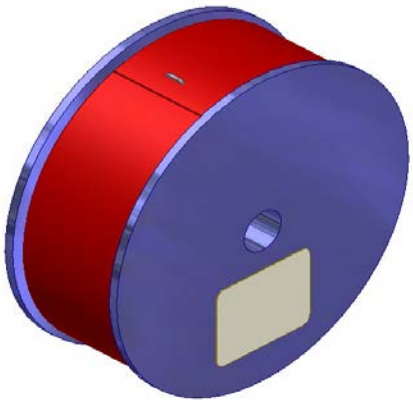

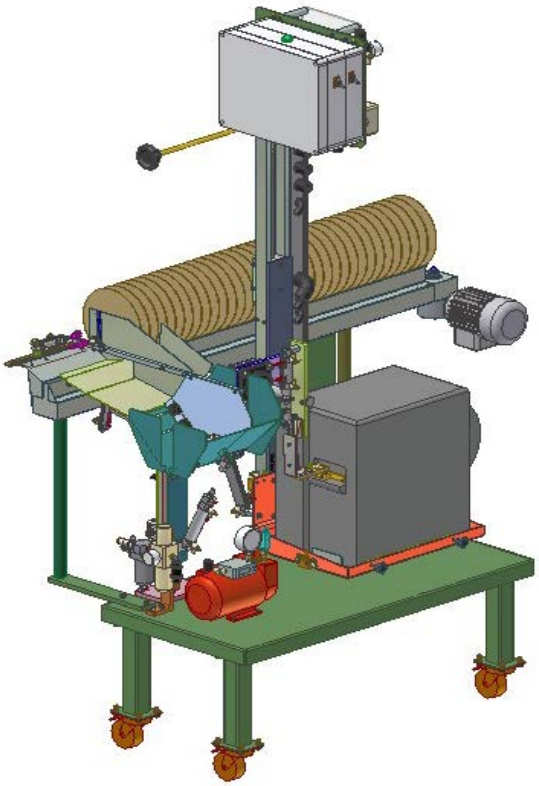

TECHNICAL FEATURES

STANDARD LABEL SIZE	28 x 40mm
SPOOL DIMENSIONS	Ø80÷220mm Length 12÷210mm
POWER SUPPLY VOLTAGE	2x230V+T 50÷60Hz 0,8kW
COMPRESSED AIR REQUIREMENTS	6÷10bar 50 Nℓ per minute
OVERALL MACHINE DIMENSIONS	1500 x 850 x h 1950mm
NET WEIGHT	220 kg

The features described above may vary and must be confirmed based on your products.